ATMX221 KEYBOARD MODULE REFERENCE DESIGN

Release Date	Revision	Design Eng.	Design Note
2020/12/10	Rev. 01	JOE CHEN	Initial release Feature 1. 6x6 Keyboard application 2. ATM2/ATM3 co-layout a. ATM2 (model name: ATM2-MOD-C) supports BLE b. ATM3 (model name: ATM3-MOD-B) supports BLE/PV application c. Antenna matching components value (C15/L3/C17) could be changed.
2020/12/10	Rev. 02	JOE CHEN	VBAT add R37-0402 0ohm.
2021/03/16	Rev. 03	JOE CHEN	U3 Pin2 rename from RFIO to NC.

ATMx-MOD-X		
Title	TITLE	
Size B	Document Number	Rev 03
Date: Tuesday, March 16, 2021	Sheet 1 of 2	

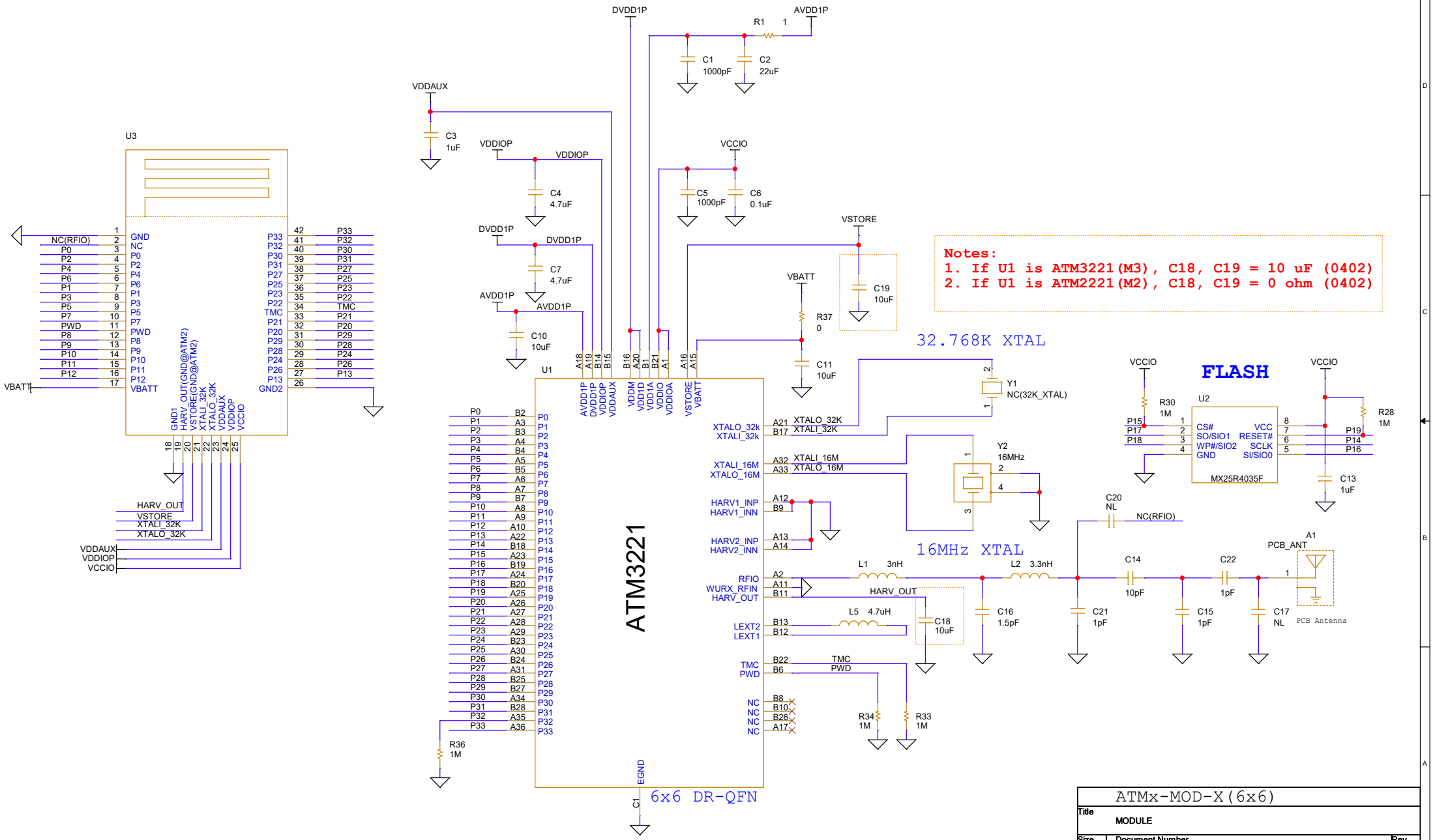
Notes:
1. If U1 is ATM3221(M3), C18, C19 = 10 uF (0402)
2. If U1 is ATM2221(M2), C18, C19 = 0 ohm (0402)
ATM3221
6x6 DR-QFN
U1
U3
U2
FLASH
MX25R4035F
32.768K XTAL
16MHz XTAL
PCB Antenna
DVDD1P
AVDD1P
VDDAUX
VDDIOP
VCCIO
VSTORE
VBATT
HARV_OUT
XTALO_32K
XTALI_32K
XTALI_16M
XTALO_16M
NC(RFIO)
R1 1
C1 1000pF
C2 22uF
C3 1uF
C4 4.7uF
C5 1000pF
C6 0.1uF
C7 4.7uF
C10 10uF
C11 10uF
C19 10uF
R37 0
Y1 NC(32K_XTAL)
Y2 16MHz
R30 1M
R28 1M
C13 1uF
C20 NL
L1 3nH
L2 3.3nH
L5 4.7uH
C14 10pF
C22 1pF
C16 1.5pF
C21 1pF
C15 1pF
C17 NL
C18 10uF
R34 1M
R33 1M
R36 1M
A1 PCB_ANT
ATMx-MOD-X(6x6)
Title MODULE
Size B
Document Number Main
Rev 03
Date: Thursday, April 01, 2021
Sheet 2 of 2