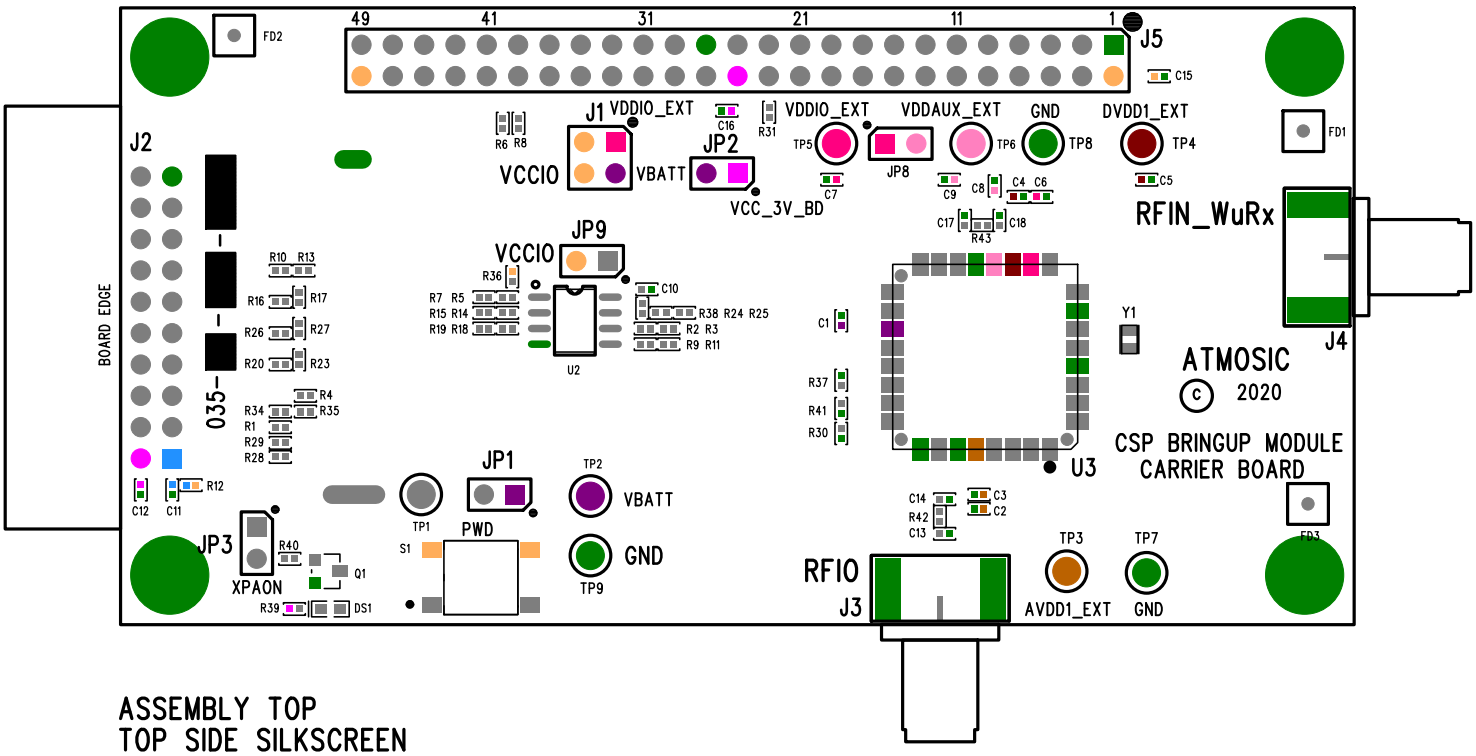

ASSEMBLY TOP
TOP SIDE SILKSCREEN

ATMOSIC TECHNOLOGIES
CSP CARRIER BOARD
REV.A
10/26/20